NOTE:ALL MATERIAL COMPLIANT ROHS STANDARD

REVISION INFORMATION			
Rev.	Rev. Date	Modified By	Brief Description

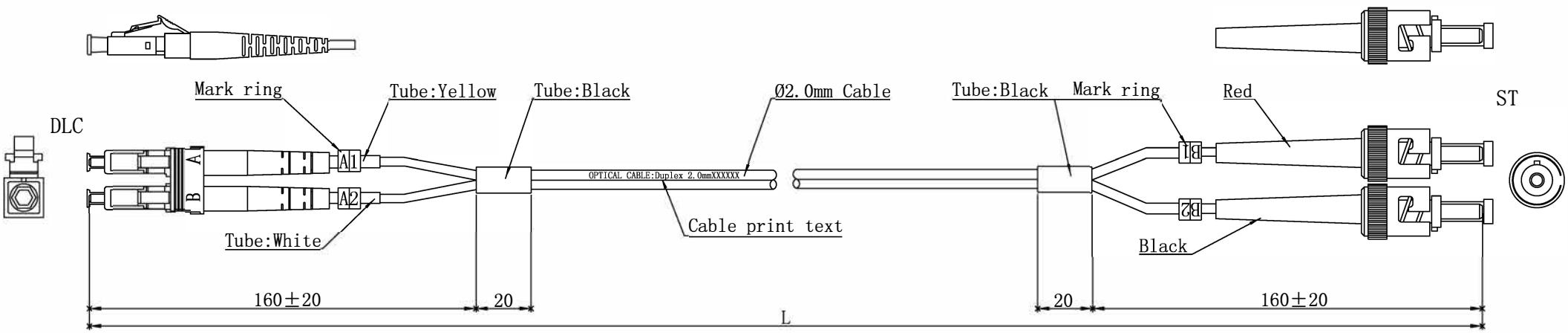

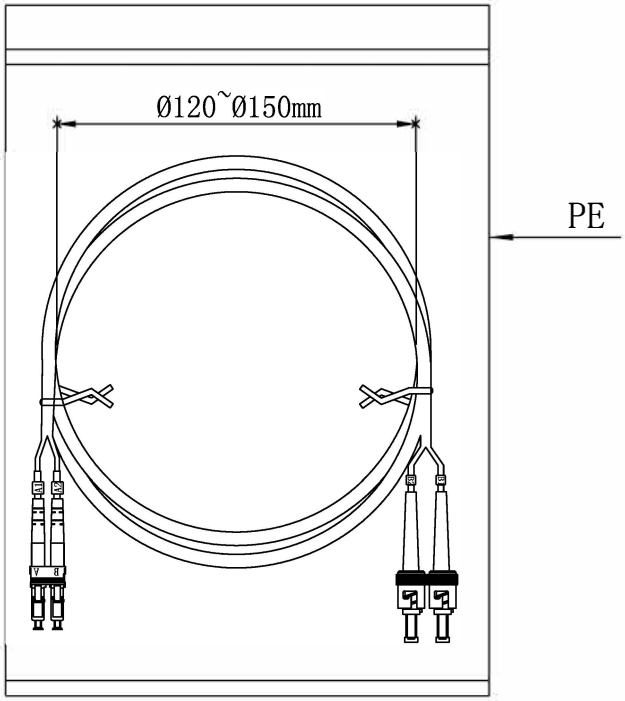

Specifications:

Type	DLC/UPC-ST/UPC
Fiber Mode	OM3
Core Diameter(um)	50/125
Operating Wavelength(nm)	850/1300
Cable Color	Aqua
Cable Diameter(mm)	Ø2.0
Operating Temperature(° C)	-40~+75
Storage Temperature(° C)	-40~+85
Insertion loss(dB)	≤0.2dB
Return loss(dB)	≥35dB
ST Connector Color(Boot)	Red/Blcak

L≤5m, TOLERANCES:0≤ΔL≤5cm
L>5m, TOLERANCES:0≤ΔL≤1%*L

Purchase @ LANshack.com
Contact Sales at 888-568-1230
or
Email us at Sales@LANshack.com

LANshack Stock Fiber Optic Patch CabLes

NO.	PART NAME	SPECIFICATION DESCRIPTION	QT'Y	UNIT
①				
②				
③				

Unless specified on the drawing, tolerances are per the follows:
. +1
.x +0.2
.xx +0.05

DRAWN BY	DATE: 2015/05/14	DESCRIPTION: LC-ST-DX OM3 Patchcord	
CHECKED BY	SHEET 1of1	ITEM NO.	
APPROVED BY	SCALE 1:1	REV. 00	UNIT:mm